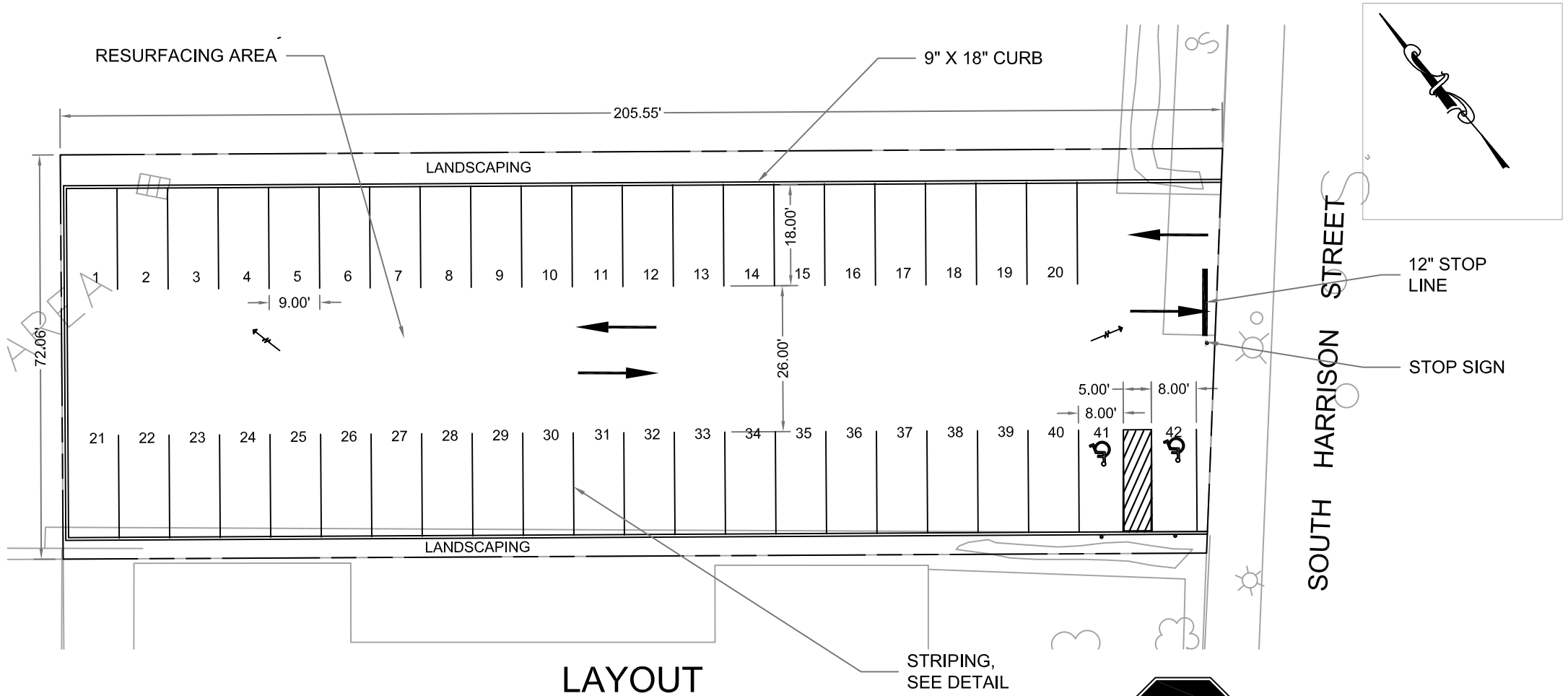

LAYOUT

SCALE: $\frac{3}{4}$" = 1'

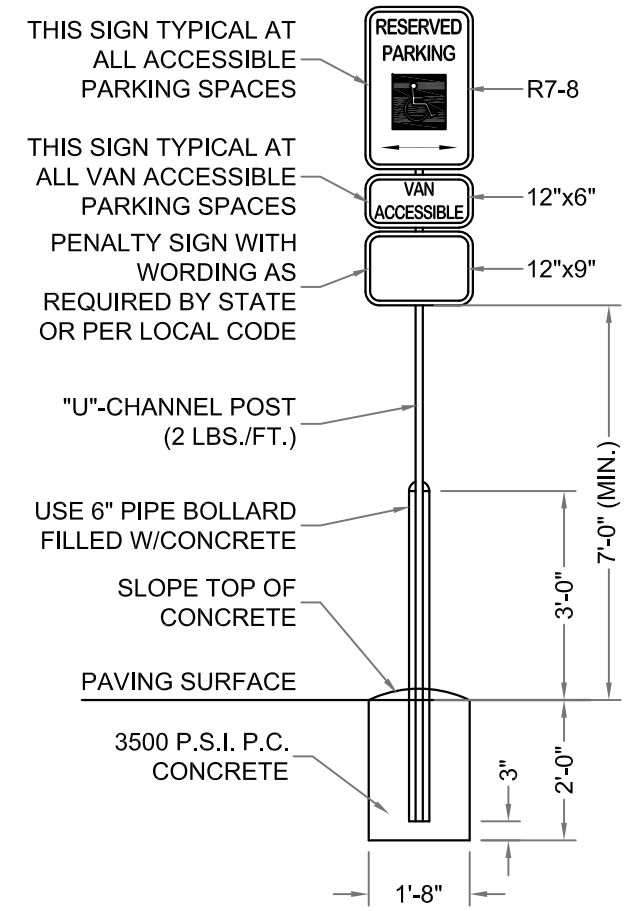

ACCESSIBLE PARKING MOUNT DETAIL (TYP.)

N.T.S.

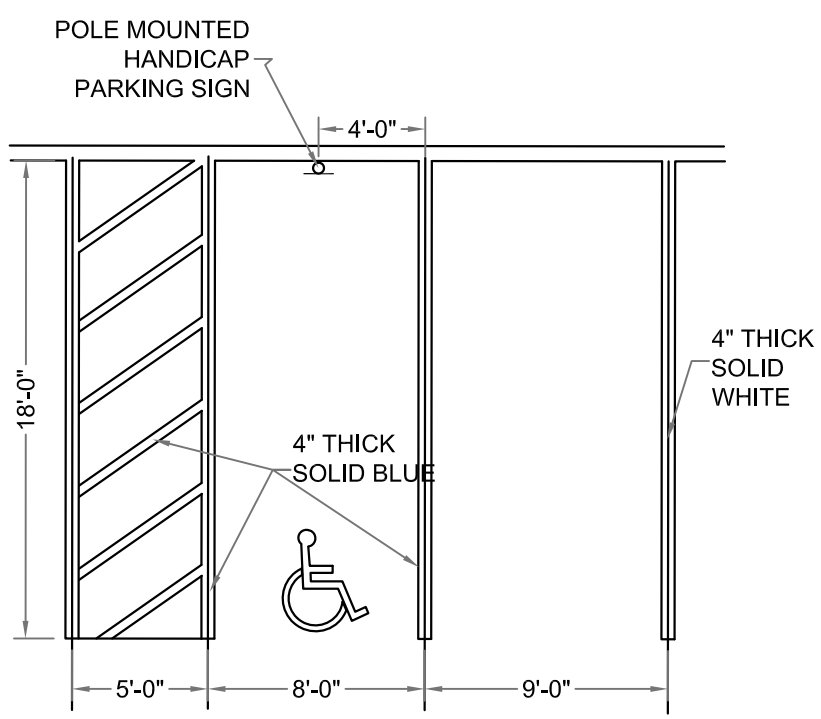

PARKING STALL AND ACCESSIBLE PARKING DETAIL (TYP.)

N.T.S.

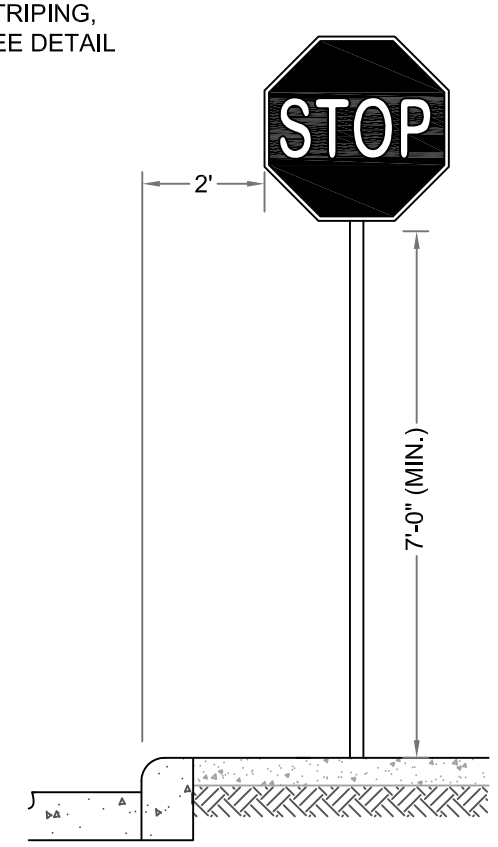

STOP SIGN RESIDENTIAL AREA (TYP.)

N.T.S.

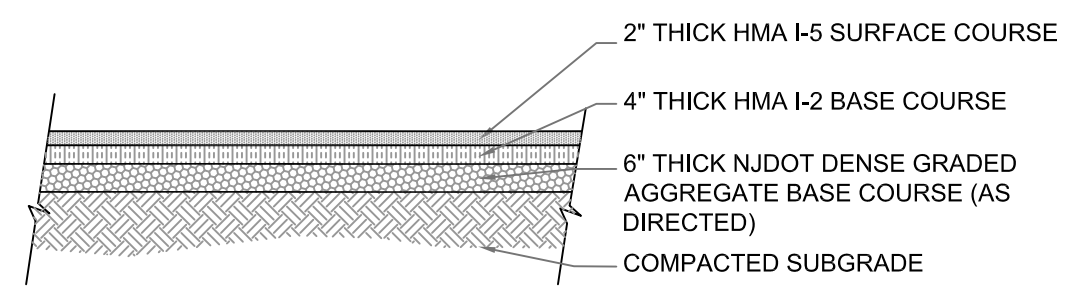

NOTE:

ALL BACK FILL NJDOT DGABC TO BE COMPACTED TO 95% OF MODIFIED PROCTOR ASTM D-1556

PARKING LOT ASPHALT PAVING DETAIL (TYP.)

N.T.S.

DESIGNED BY:	DRAWN BY:	CHECKED BY:	LAYOUT
APPROVED BY:		REVISIONS NO. / DATE	RESURFACING OF 147 SO. HARRISON STREET (BLOCK 711, LOT 7.01) CITY OF EAST ORANGE ESSEX COUNTY NEW JERSEY
			DEPARTMENT OF PUBLIC WORKS OFFICE OF THE CITY ENGINEER 44 CITY HALL PLAZA, EAST ORANGE, NEW JERSEY 07019
SIGNATURE	DATE	SCALE: 3/4" = 1'	DATE: 5/16/19 · PROJECT NO.: · SHEET NO.: 1 OF 1